Project 3

Angle Clamp Assembly

In this project, you will create components for a Angle Clamp assembly and then assemble them. You need to create all the components as separate part files. The views and dimensions of the components are shown in Figures P3-3 through P3-13.

You can also download the model files for your reference from www.cadcim.com. To download the files, use the following path: *Textbooks > CAD/CAM > SOLIDWORKS > SOLIDWORKS 2025 for Designers > Projects for Free Download > Project 3*

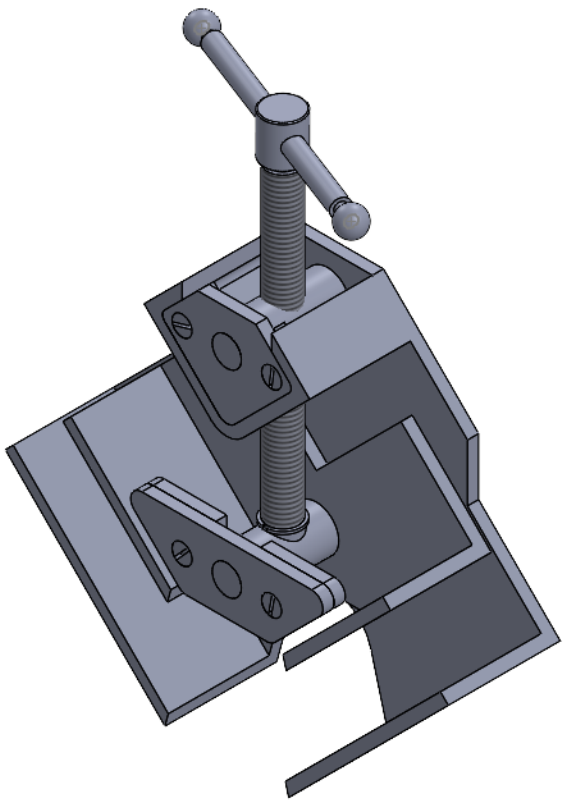

Figure P3-1

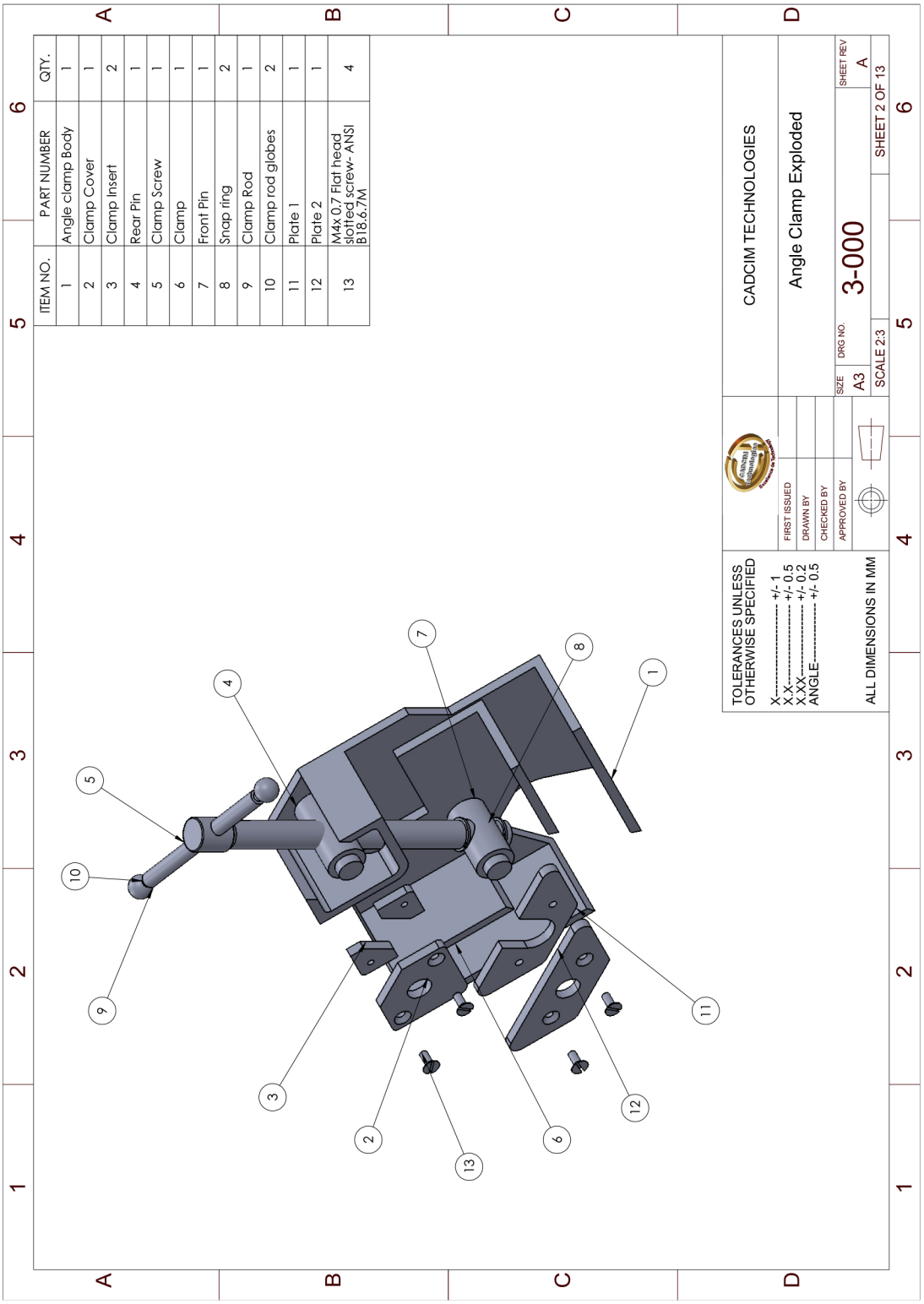
ITEM NO. | PART NUMBER | QTY.
1 | Angle clamp Body | 1
2 | Clamp Cover | 1
3 | Clamp Insert | 2
4 | Rear Pin | 1
5 | Clamp Screw | 1
6 | Clamp | 1
7 | Front Pin | 1
8 | Snap ring | 2
9 | Clamp Rod | 1
10 | Clamp rod globes | 2
11 | Plate 1 | 1
12 | Plate 2 | 1
13 | M4x 0.7 Flat head slotted screw- ANSI B18.6.7M | 4
TOLERANCES UNLESS OTHERWISE SPECIFIED
X ---------- +/- 1
X.X ---------- +/- 0.5
X.XX ---------- +/- 0.2
ANGLE ---------- +/- 0.5
ALL DIMENSIONS IN MM
FIRST ISSUED
DRAWN BY
CHECKED BY
APPROVED BY
CADCIM TECHNOLOGIES
Angle Clamp Exploded
SIZE A3
DRG NO. 3-000
SHEET REV A
SCALE 2:3
SHEET 2 OF 13

Figure P3-2

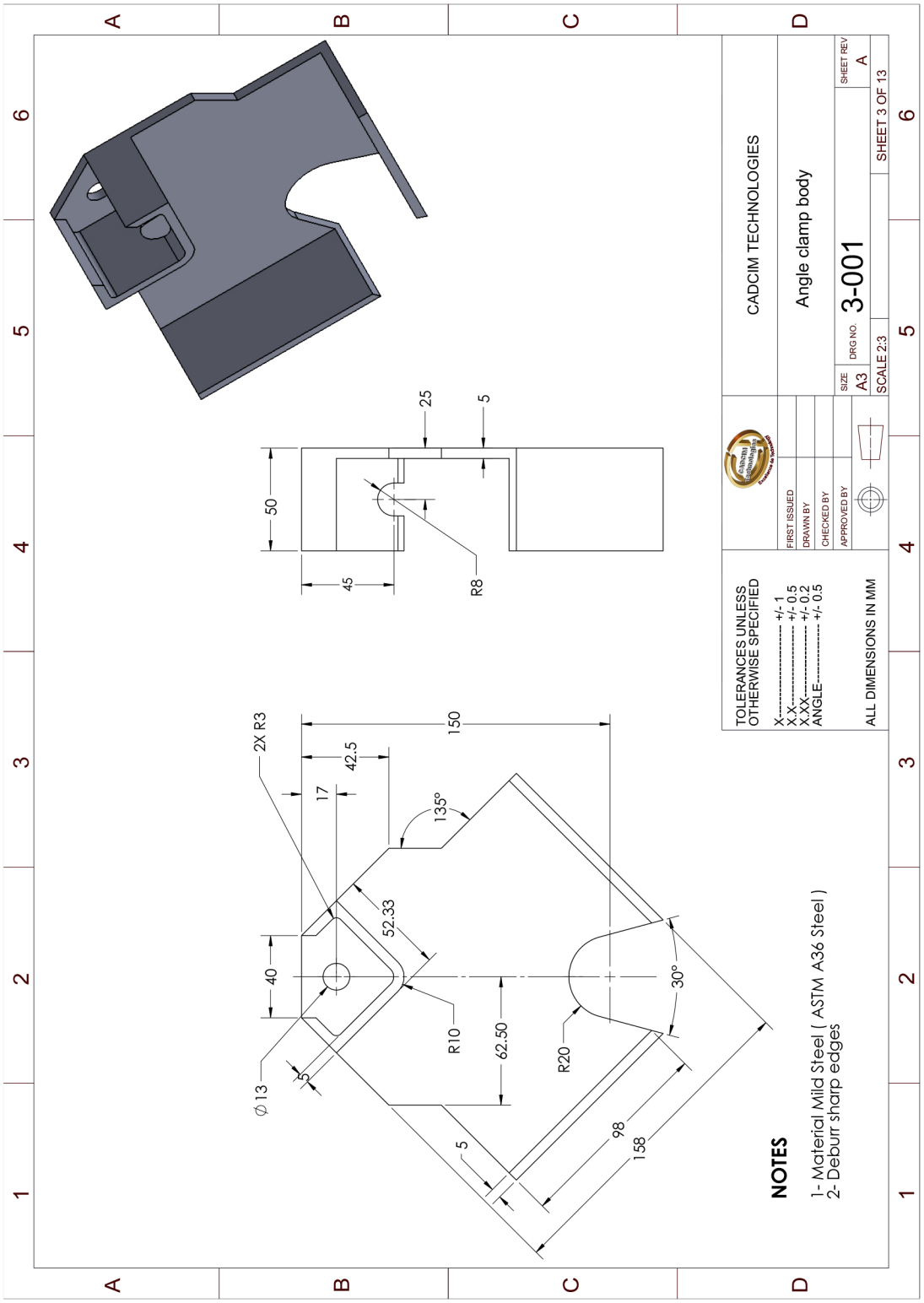
CADCIM TECHNOLOGIES
Angle clamp body
3-001
SIZE A3
DRG NO.
SCALE 2:3
SHEET 3 OF 13
SHEET REV A
FIRST ISSUED
DRAWN BY
CHECKED BY
APPROVED BY
TOLERANCES UNLESS OTHERWISE SPECIFIED
X ---------- +/- 1
X.X ---------- +/- 0.5
X.XX ---------- +/- 0.2
ANGLE ---------- +/- 0.5
ALL DIMENSIONS IN MM
NOTES
1- Material Mild Steel (ASTM A36 Steel)
2- Deburr sharp edges
2X R3
150
42.5
17
135°
52.33
40
R10
62.50
R20
30°
Ø 13
5
98
158
25
5
50
45
R8

Figure P3-3

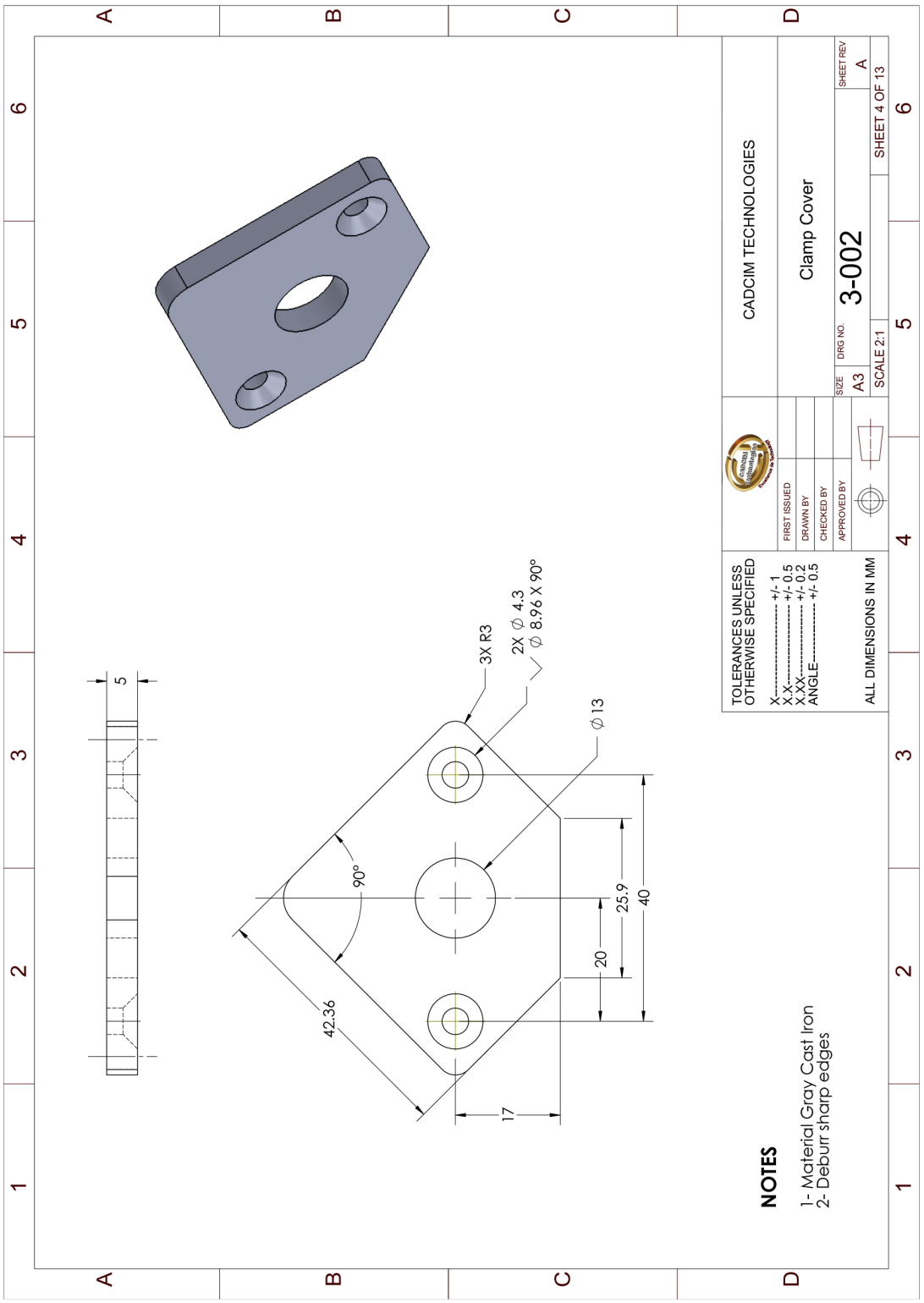
A
B
C
D
1
2
3
4
5
6
5
3X R3
2X ⌀ 4.3
⌀ 8.96 X 90°
⌀ 13
90°
42.36
20
25.9
40
17
NOTES
1- Material Gray Cast Iron
2- Deburr sharp edges
TOLERANCES UNLESS
OTHERWISE SPECIFIED
X ---------- +/- 1
X.X ---------- +/- 0.5
X.XX ---------- +/- 0.2
ANGLE ---------- +/- 0.5
ALL DIMENSIONS IN MM
FIRST ISSUED
DRAWN BY
CHECKED BY
APPROVED BY
CADCIM TECHNOLOGIES
Clamp Cover
SIZE
A3
DRG NO.
3-002
SHEET REV
A
SCALE 2:1
SHEET 4 OF 13

Figure P3-4

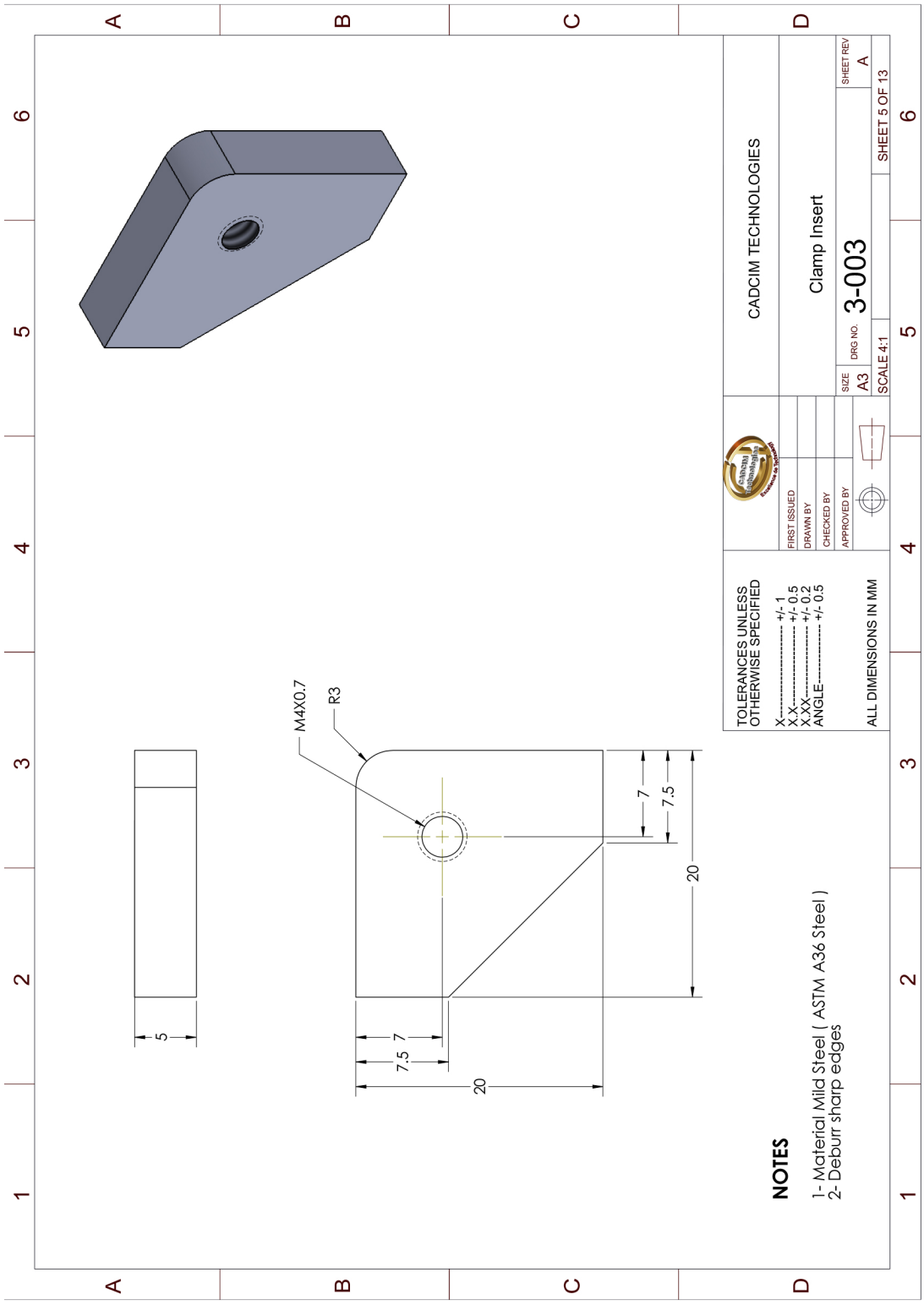
M4X0.7
R3
5
7
7.5
20
7
7.5
20
NOTES
1- Material Mild Steel (ASTM A36 Steel)
2- Deburr sharp edges
TOLERANCES UNLESS OTHERWISE SPECIFIED
X ---------- +/- 1
X.X ---------- +/- 0.5
X.XX ---------- +/- 0.2
ANGLE ---------- +/- 0.5
ALL DIMENSIONS IN MM
FIRST ISSUED
DRAWN BY
CHECKED BY
APPROVED BY
CADCIM TECHNOLOGIES
Clamp Insert
SIZE A3
DRG NO. 3-003
SCALE 4:1
SHEET 5 OF 13
SHEET REV A

Figure P3-5

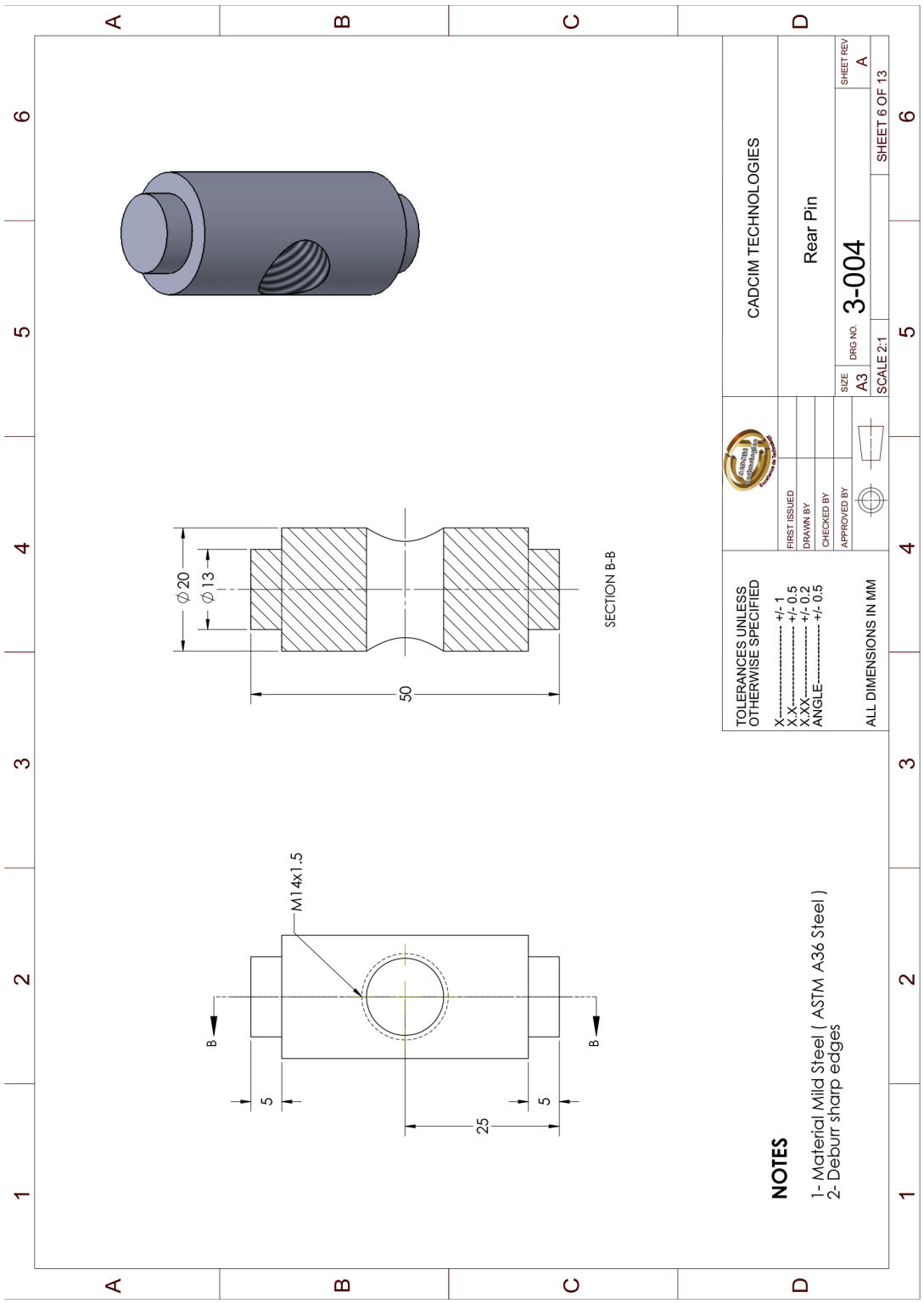
A
B
C
D
1
2
3
4
5
6
M14x1.5
B
B
5
5
25
ϕ20
ϕ13
50
SECTION B-B
NOTES
1- Material Mild Steel (ASTM A36 Steel)
2- Deburr sharp edges
TOLERANCES UNLESS OTHERWISE SPECIFIED
X ---------- +/- 1
X.X ---------- +/- 0.5
X.XX ---------- +/- 0.2
ANGLE ---------- +/- 0.5
ALL DIMENSIONS IN MM
FIRST ISSUED
DRAWN BY
CHECKED BY
APPROVED BY
CADCIM TECHNOLOGIES
Rear Pin
SIZE A3
DRG NO. 3-004
SCALE 2:1
SHEET 6 OF 13
SHEET REV A

Figure P3-6

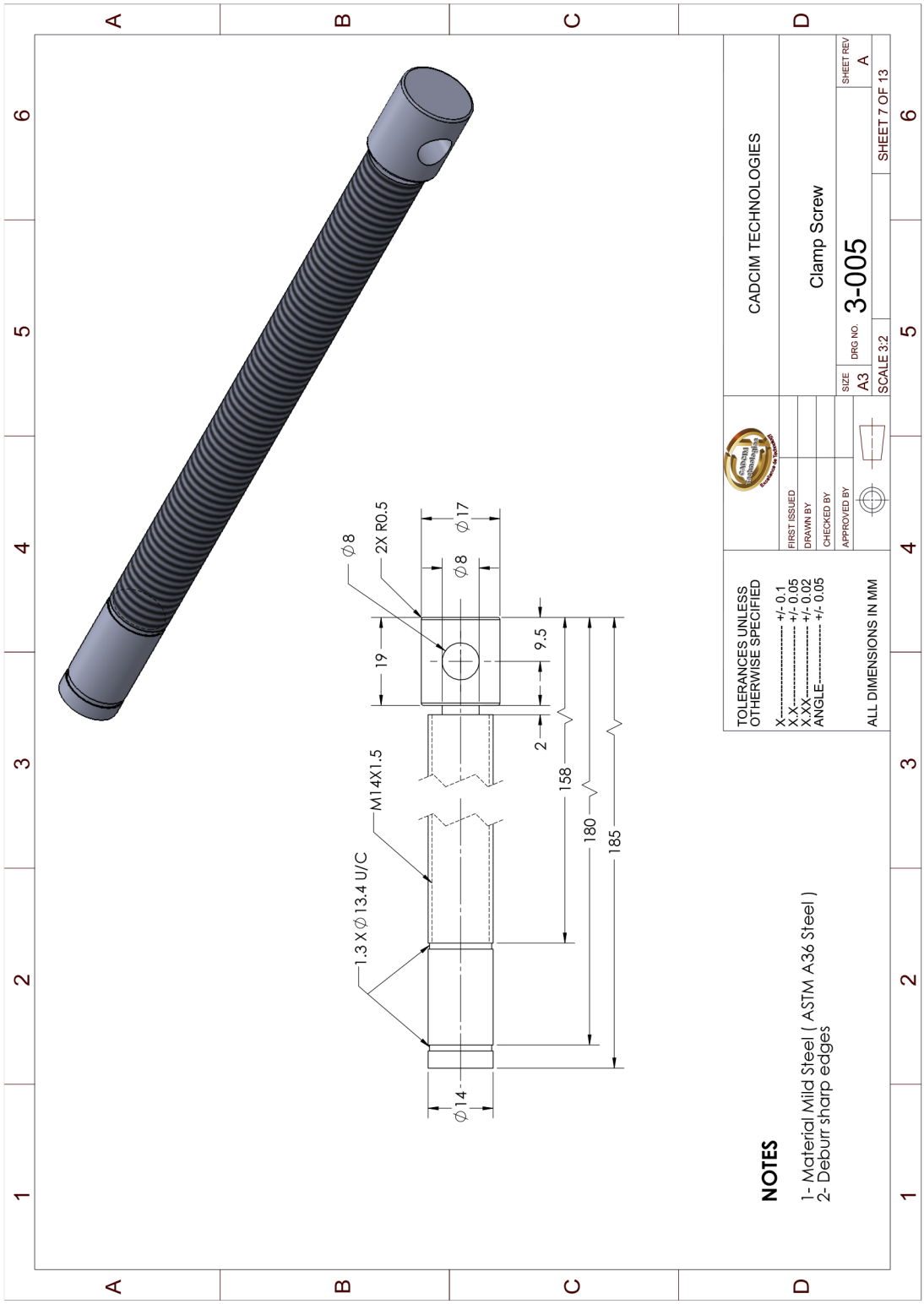
CADCIM TECHNOLOGIES
Clamp Screw
3-005
SIZE A3
DRG NO.
SHEET REV A
SCALE 3:2
SHEET 7 OF 13
FIRST ISSUED
DRAWN BY
CHECKED BY
APPROVED BY
TOLERANCES UNLESS OTHERWISE SPECIFIED
X ---------- +/- 0.1
X.X ---------- +/- 0.05
X.XX ---------- +/- 0.02
ANGLE ---------- +/- 0.05
ALL DIMENSIONS IN MM
NOTES
1- Material Mild Steel (ASTM A36 Steel)
2- Deburr sharp edges
ϕ8
2X R0.5
ϕ8
ϕ17
19
9.5
2
158
180
185
M14X1.5
1.3 X ϕ 13.4 U/C
ϕ14

Figure P3-7

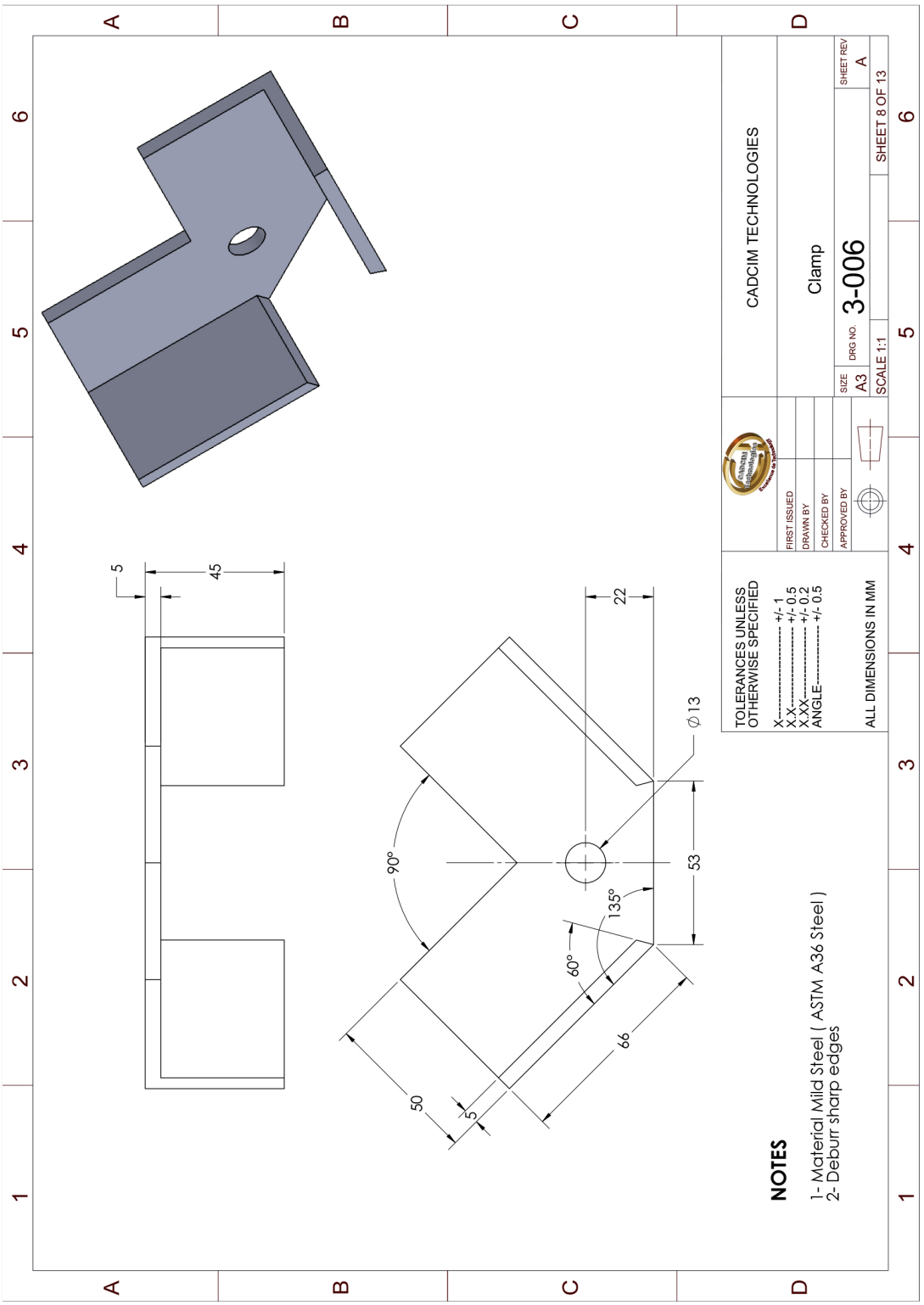
A
B
C
D
1
2
3
4
5
6
5
45
22
Ø 13
90°
135°
60°
53
66
50
5
NOTES
1- Material Mild Steel (ASTM A36 Steel)
2- Deburr sharp edges
TOLERANCES UNLESS OTHERWISE SPECIFIED
X ---------- +/- 1
X.X ---------- +/- 0.5
X.XX ---------- +/- 0.2
ANGLE ---------- +/- 0.5
ALL DIMENSIONS IN MM
FIRST ISSUED
DRAWN BY
CHECKED BY
APPROVED BY
CADCIM TECHNOLOGIES
Clamp
SIZE A3
DRG NO. 3-006
SCALE 1:1
SHEET 8 OF 13
SHEET REV A

Figure P3-8

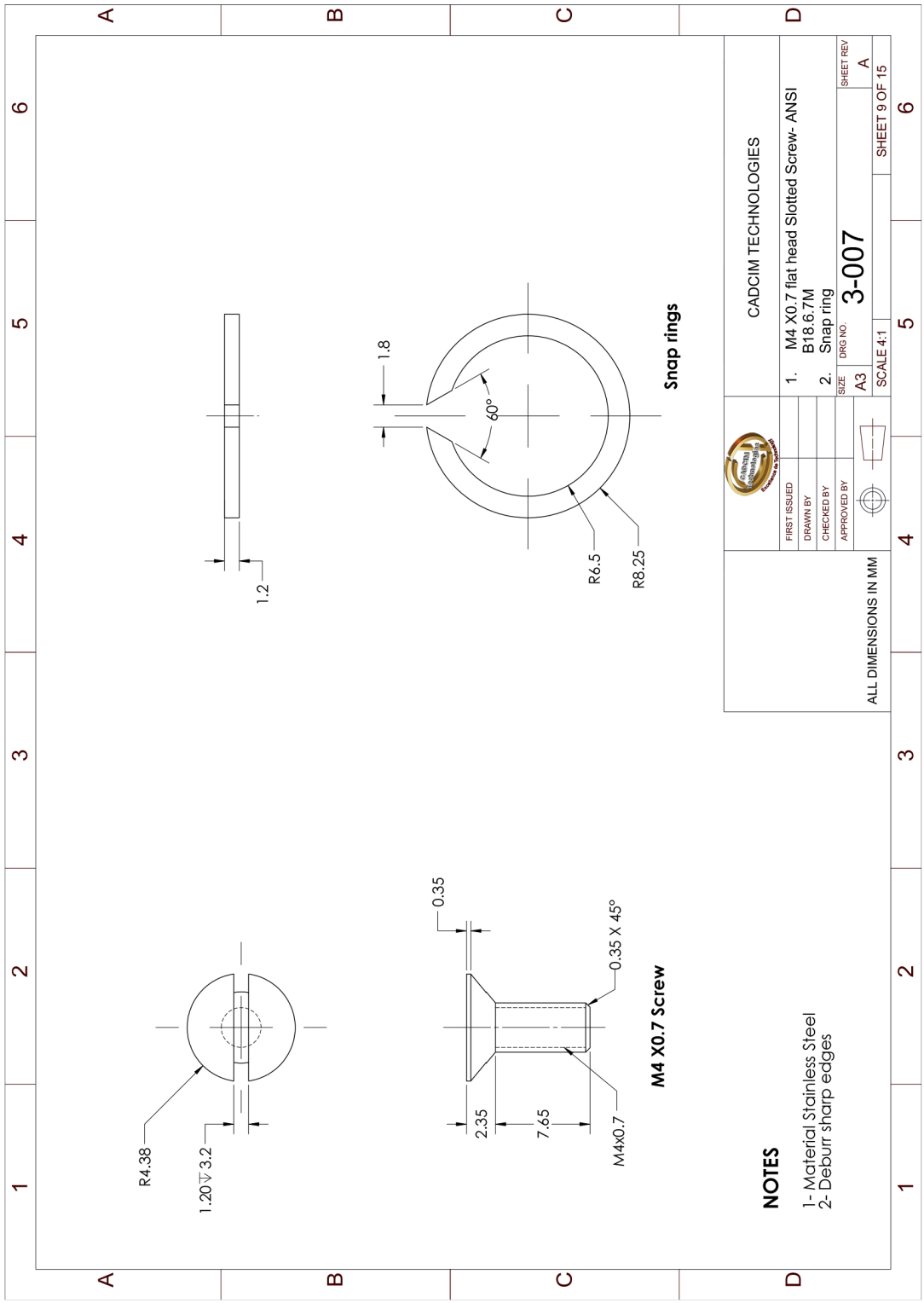
NOTES
1- Material Stainless Steel
2- Deburr sharp edges
M4 X0.7 Screw
Snap rings
CADCIM TECHNOLOGIES
1. M4 X0.7 flat head Slotted Screw- ANSI B18.6.7M
2. Snap ring
FIRST ISSUED
DRAWN BY
CHECKED BY
APPROVED BY
SIZE A3
DRG NO. 3-007
SHEET REV A
SCALE 4:1
SHEET 9 OF 15
ALL DIMENSIONS IN MM

Figure P3-9

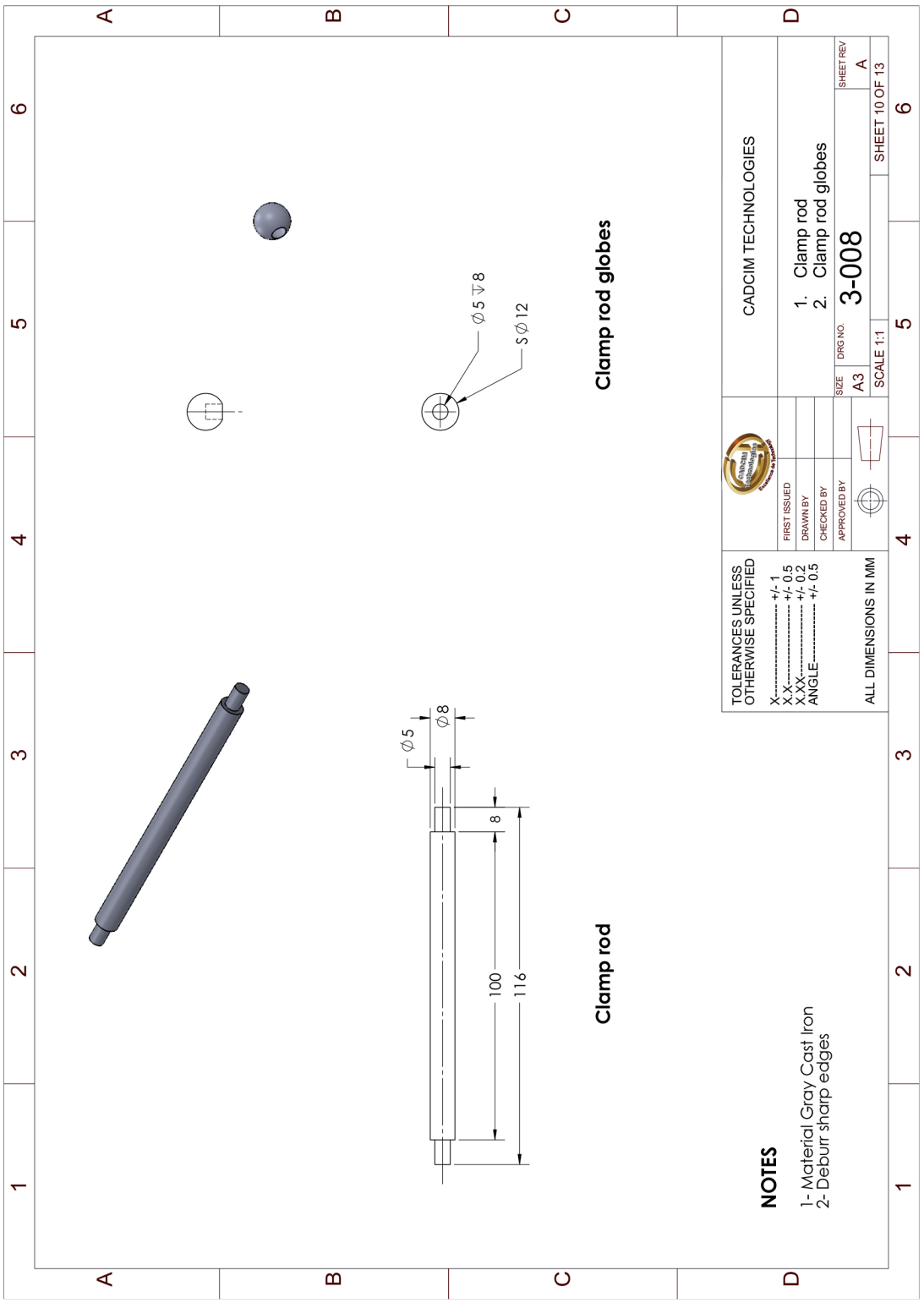
Clamp rod globes
Clamp rod
Ø5 ↧8
S Ø12
Ø5
Ø8
8
100
116
NOTES
1- Material Gray Cast Iron
2- Deburr sharp edges
TOLERANCES UNLESS OTHERWISE SPECIFIED
X---------- +/- 1
X.X---------- +/- 0.5
X.XX---------- +/- 0.2
ANGLE---------- +/- 0.5
ALL DIMENSIONS IN MM
FIRST ISSUED
DRAWN BY
CHECKED BY
APPROVED BY
CADCIM TECHNOLOGIES
1. Clamp rod
2. Clamp rod globes
SIZE
A3
DRG NO.
3-008
SHEET REV
A
SCALE 1:1
SHEET 10 OF 13

Figure P3-10

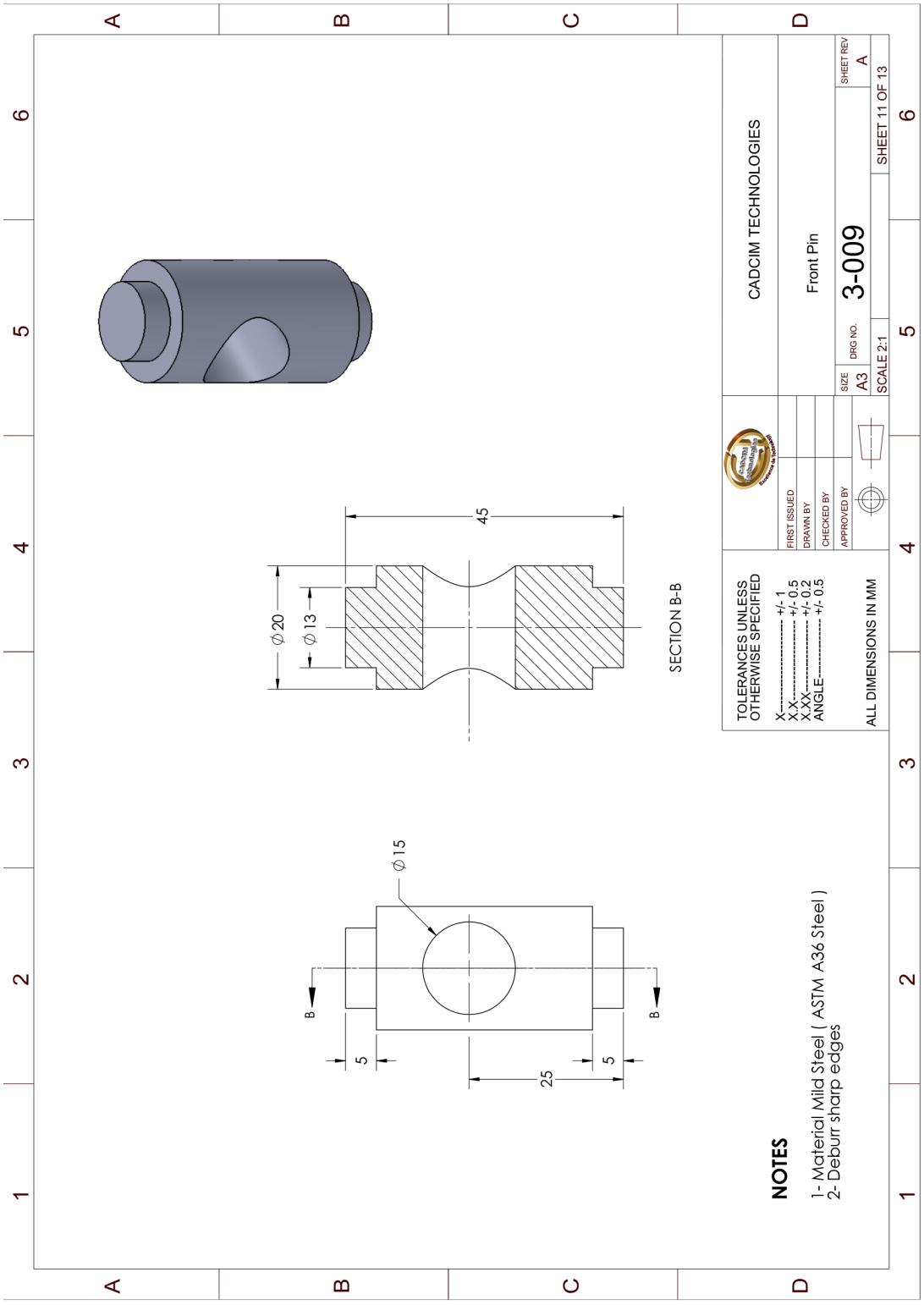
A
B
C
D
1
2
3
4
5
6
NOTES
1- Material Mild Steel (ASTM A36 Steel)
2- Deburr sharp edges
ϕ15
B
B
5
25
5
ϕ20
ϕ13
45
SECTION B-B
TOLERANCES UNLESS OTHERWISE SPECIFIED
X---------- +/- 1
X.X---------- +/- 0.5
X.XX---------- +/- 0.2
ANGLE---------- +/- 0.5
ALL DIMENSIONS IN MM
FIRST ISSUED
DRAWN BY
CHECKED BY
APPROVED BY
CADCIM TECHNOLOGIES
Front Pin
SIZE
A3
DRG NO.
3-009
SHEET REV
A
SCALE 2:1
SHEET 11 OF 13

Figure P3-11

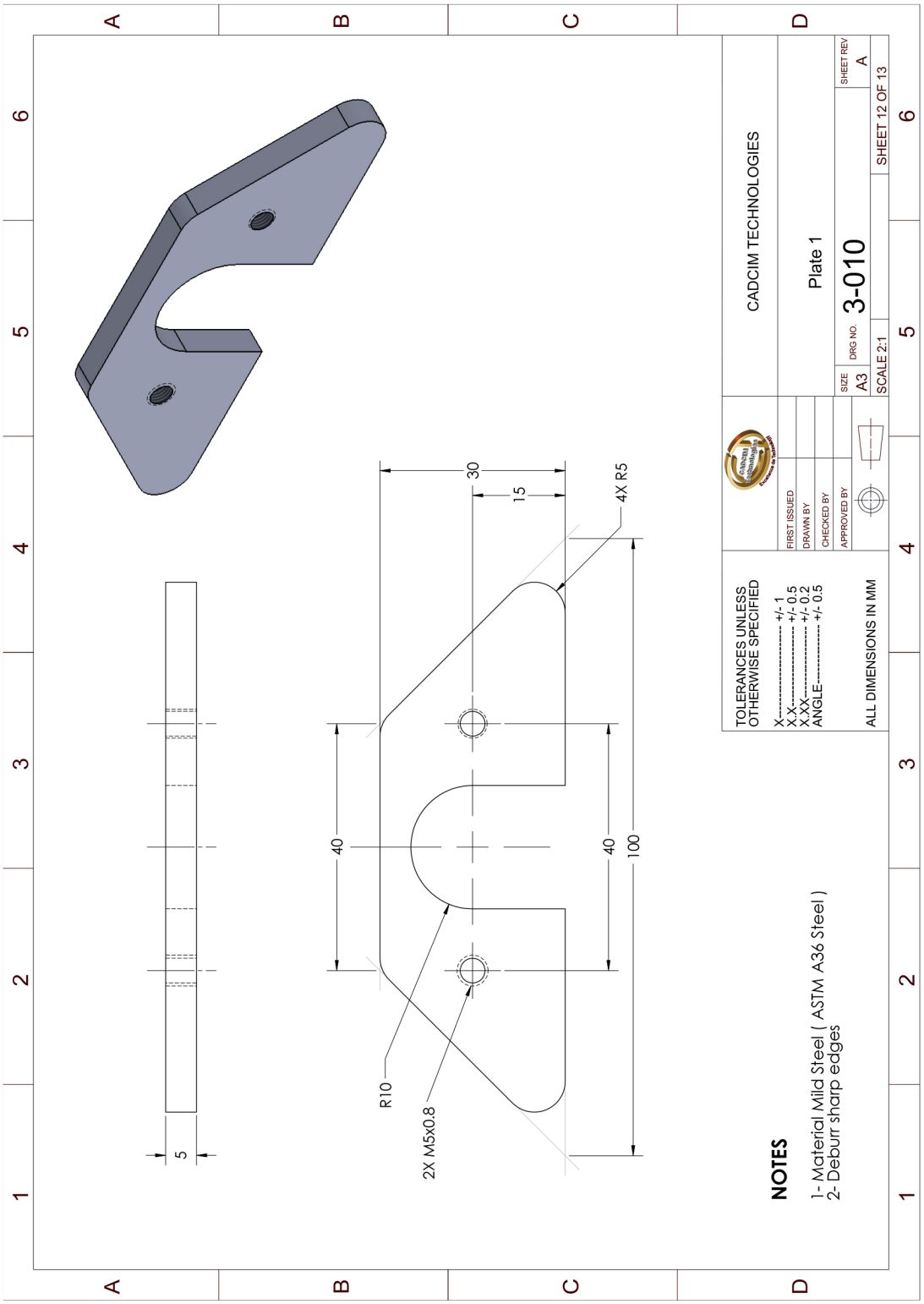
A
B
C
D
1
2
3
4
5
6
30
15
4X R5
40
40
100
R10
2X M5x0.8
5
NOTES
1- Material Mild Steel (ASTM A36 Steel)
2- Deburr sharp edges
TOLERANCES UNLESS OTHERWISE SPECIFIED
X ---------- +/- 1
X.X ---------- +/- 0.5
X.XX ---------- +/- 0.2
ANGLE ---------- +/- 0.5
ALL DIMENSIONS IN MM
FIRST ISSUED
DRAWN BY
CHECKED BY
APPROVED BY
CADCIM TECHNOLOGIES
Plate 1
SIZE A3
DRG NO. 3-010
SCALE 2:1
SHEET 12 OF 13
SHEET REV A

Figure P3-12

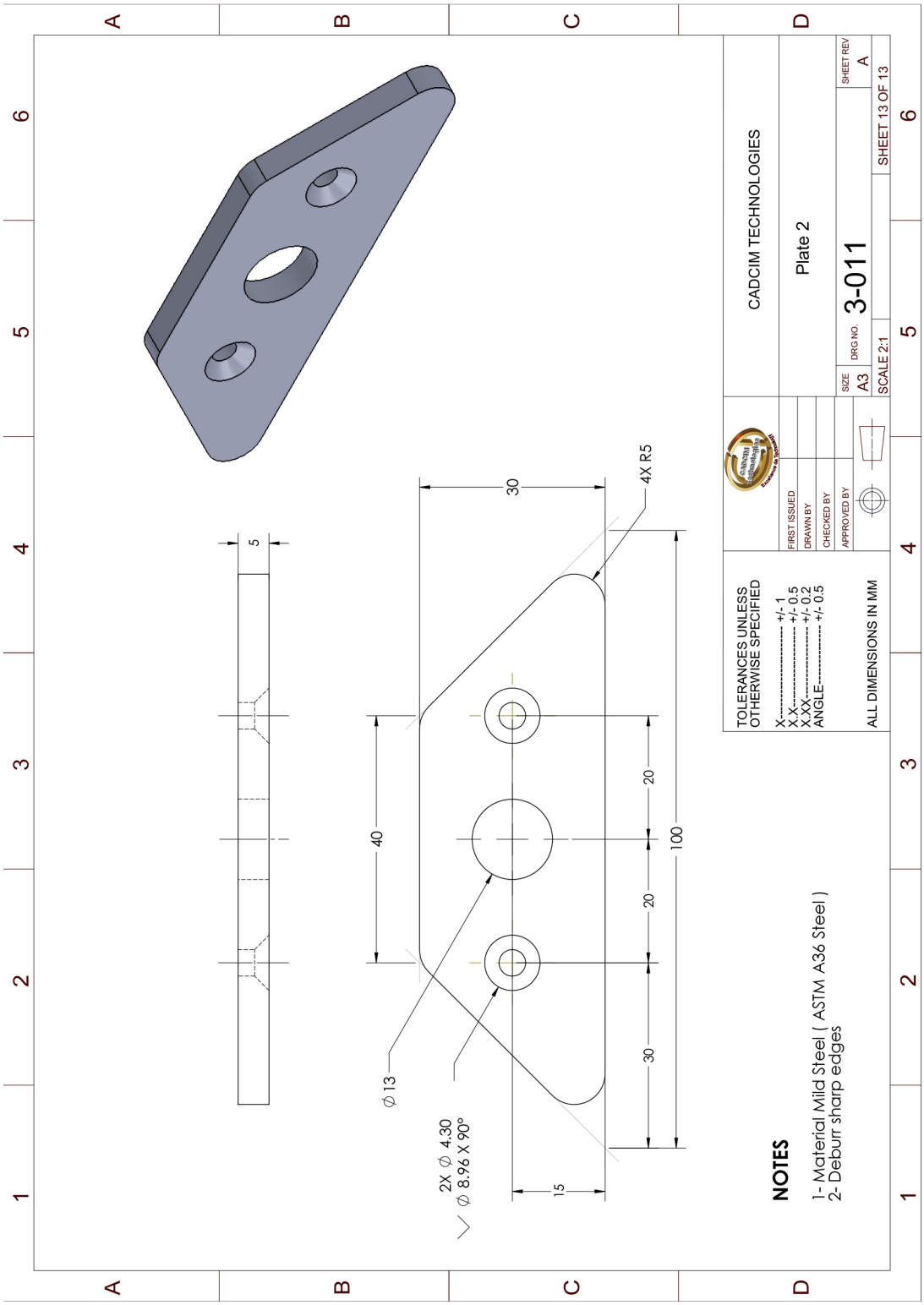
A
B
C
D
1
2
3
4
5
6
5
30
4X R5
40
20
20
30
100
15
⌀13
2X ⌀ 4.30
⌵ ⌀ 8.96 X 90°
NOTES
1- Material Mild Steel (ASTM A36 Steel)
2- Deburr sharp edges
TOLERANCES UNLESS OTHERWISE SPECIFIED
X ---------- +/- 1
X.X ---------- +/- 0.5
X.XX ---------- +/- 0.2
ANGLE ---------- +/- 0.5
ALL DIMENSIONS IN MM
FIRST ISSUED
DRAWN BY
CHECKED BY
APPROVED BY
CADCIM TECHNOLOGIES
Plate 2
SIZE A3
DRG NO. 3-011
SCALE 2:1
SHEET 13 OF 13
SHEET REV A

Figure P3-13